UDK 621.383:621.316.722

ANALYSIS OF THE CURRENT STATE OF OUTDOOR LIGHTING CONTROL AUTOMATION SYSTEMS

Mukhammadziyo Ismanov, *associate professor,*
Department of Technological Process Automation
E-mail: ismanovm91@gmail.com
ORCID: 0000-0001-8137-5725
Namangan State Technical University

Abstract*: This article highlights the importance of renewable energy sources, in particular, the advantages and technical foundations of using solar energy. The structure, operating principle and electrical characteristics of solar panels are analyzed. It is shown that solar cells operating on the basis of the photovoltaic effect generate direct electric current, their power is from 10 to 300 W, and their efficiency is around 15–40 %. The article justifies the series and parallel connection schemes of solar modules, methods for reducing energy losses, and the need to use shunt diodes to eliminate the "hot spot effect". It also explains the role of voltage converters in matching solar panels with the load. The research results will allow increasing the efficiency of autonomous solar power plants and the widespread use of renewable energy sources.*

Annotatsiya: *Ushbu maqolada qayta tiklanadigan energiya manbalarining ahamiyati, xususan, quyosh energiyasidan foydalanishning afzalliklari va texnik asoslari ta'kidlangan. Quyosh panellarining tuzilishi, ishlash printsipi va elektr xususiyatlari tahlil qilingan. Fotovoltaik effekt asosida ishlaydigan quyosh batareyalari to'g'ridan-to'g'ri elektr tokini ishlab chiqarishi, ularning quvvati 10 dan 300 Vt gacha va samaradorligi taxminan 15–40% ni tashkil qilishi ko'rsatilgan. Maqolada quyosh modullarining ketma-ket va parallel ulanish sxemalari, energiya yo'qotishlarini kamaytirish usullari va "issiq nuqta effekti"ni yo'qotish uchun shunt diodlaridan foydalanish zarurati asoslanadi. Shuningdek, u quyosh panellarini yuk bilan moslashtirishda kuchlanish konvertorlarining rolini tushuntiradi. Tadqiqot natijalari avtonom quyosh elektr stantsiyalarining samaradorligini oshirish va qayta tiklanadigan energiya manbalaridan keng foydalanish imkonini beradi.*

Аннотация: *В статье рассматривается важность возобновляемых источников энергии, в частности, преимущества и технические основы использования солнечной энергии. Проанализированы структура, принцип работы и электрические характеристики солнечных панелей. Показано, что солнечные элементы, работающие на основе фотовольтаического эффекта, генерируют постоянный электрический ток, их мощность составляет от 10 до 300 Вт, а КПД — около 15–40%. В статье обоснованы схемы последовательного и параллельного соединения солнечных модулей, способы снижения потерь энергии и необходимость использования шунтирующих диодов для устранения «эффекта горячей точки». Также объясняется роль преобразователей напряжения в согласовании солнечных панелей с нагрузкой. Результаты исследования позволят повысить эффективность автономных солнечных электростанций и обеспечить широкое использование возобновляемых источников энергии.*

Keywords: *energy, global, resource, future, battery, Photoelectric, converter, power, Electricity, area, module, intersection.*

Kalit so'zlar: *energiya, global, resurs, kelajak, batareya, fotoelektr, konvertor, quvvat, elektr energiyasi, maydon, modul, kesishma.*

Ключевые слова: *энергия, глобальный, ресурс, будущее, аккумулятор, фотоэлектрический, преобразователь, мощность, электроэнергия, площадь, модуль, пересечение.*

Itroduction. The global demand for renewable energy sources (RES) is constantly growing. By 2050, their share in the global energy balance is expected to increase to 35%. Today, almost all developed countries are developing and implementing programs related to alternative energy. The main advantages of renewable energy sources - inexhaustibility and environmental friendliness - have led to the rapid development of renewable energy abroad and very optimistic forecasts for its prospects in the coming decades.

The main reasons for the development of renewable energy sources are ensuring energy and environmental security, environmental protection, capturing world markets for renewable energy sources, preserving our own energy resources for future generations, as well as increasing the consumption of raw materials. for non-energy fuel supply.

Today, the use of renewable energy sources has become an important and mandatory direction in the development of the energy sector of the future. Consequently, the use of renewable energy sources reduces the cost of providing electricity to remote settlements and significantly saves on the construction of new power grids. Let's analyze the existing types of renewable (see Table 1) energy sources [1,2].

Table 1

Analysis of existing types of renewable energy sources

Source type	Safety (global accidents)	Environmental problems	Possibility of technical solution to environmental problem	The time frame for resolving an environmental problem is more than 1 year.	Economic evaluation	Social factor, proximity to the consumer
Organic residues	0	-	+	+	+	0
nuclear	-	-	0	-	-	-
hydroelectric plants	0	-	+	+	+	0
wind	+	0	+	+	0	+
solar	+	+	+	+	0	+

Methodology & empirical analysis. Purpose and operating principle of solar panels.

A solar cell is a system of interconnected photovoltaic converters. Photocells generate direct current, converted from solar energy. Energy conversion in a photovoltaic converter is based on the photoelectric effect (photoelectric effect) that occurs in inhomogeneous semiconductor structures under the influence of solar radiation. Solar modules are designed to charge batteries with a nominal voltage of 12V. The power of solar cell modules can reach 10-300 W. The electrical parameters of such modules are reflected in the current-voltage characteristic, determined under standard conditions (i.e., when the solar radiation power is 1000 W / m^2, the temperature of the elements is 25 ° C and the solar spectrum is 45 °) (see Fig. 1.2). The point of intersection of the curve with the voltage axis is called the open-circuit voltage Uxx, and with the current axis - the short-circuit current Is.c. The same graph shows the curve of the power received from solar cells depending on the load. The power rating of the module is

defined as the peak power under standard conditions. The voltage value corresponding to the maximum power is called the operating voltage Ur, and the corresponding current is called the operating current Ir. The operating voltage for a module consisting of 36 elements is approximately 16-17V at a temperature of 25 ° C (0.45-0.47 V / element). This voltage reserve is necessary to compensate for the decrease in the operating voltage when the module is heated by solar radiation. The temperature coefficient of the open-circuit voltage for silicon is minus 0.4% / degree. The temperature coefficient of the current is plus 0.07% / degree. The open-circuit voltage of the solar module changes little with changes in illumination, while the short-circuit current is directly proportional. The efficiency of the solar module is defined as the ratio of the maximum power of the module to the total radiation power falling on its surface under standard conditions and is 15-40%.

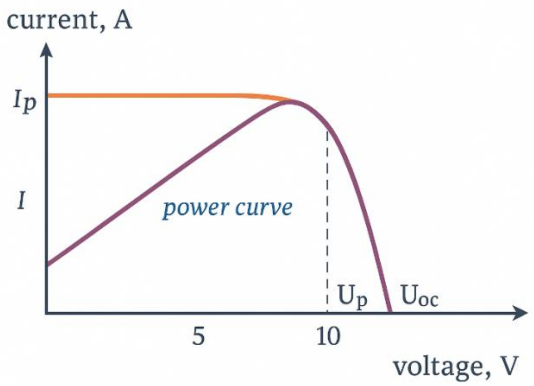

Figure 1.1-Volt-ampere characteristics of solar panels

Results. To obtain the required power and operating voltage, the modules are connected in series or parallel. The power of the solar battery is always less than the sum of the power of the modules - losses due to differences in the characteristics of modules of the same type (mismatch losses). The more carefully the modules in the battery are selected (i.e., the smaller the difference in the characteristics of the modules), the lower the mismatch losses. For example, when ten modules are connected in series with a spread of 10% characteristics, the losses are about 6%, and with a spread of 5% they decrease to 2%.

If one module or part of the module elements is shaded, a “hot spot effect” occurs in the solar battery when connected in series - the shaded module (or element) begins to dissipate all the power generated. The illuminated modules (or elements), quickly heat up and fail. To eliminate this effect, a shunt diode is installed in parallel with each module (or part of it). When connecting more than two modules in series, a diode is required. A blocking diode is also connected to each line (series-connected modules) to equalize the line voltages. All these diodes are usually placed in the module junction box. The parallel and series connection diagram of solar modules is shown in Figure 2. [3,4]

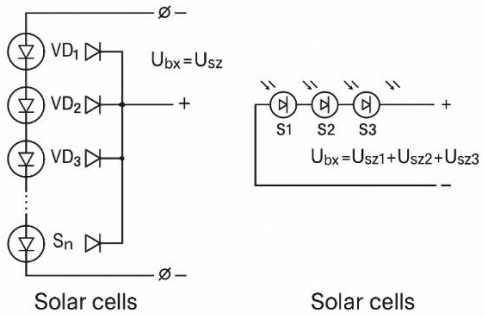

Figure 2- Parallel and series connection schemes for solar modules

The current-voltage curve of a solar cell has the same shape as a single module. The operating point of the battery connected to the load does not always coincide with the maximum power point (especially since the position of the latter depends on the lighting conditions and ambient temperature). Connecting a load, such as an electric motor, can shift the operating point of the system to the minimum or even zero power area (and the motor simply will not start). As a result, the next important component of a solar cell is the voltage converters that can match the solar cell to the load.[3,4]

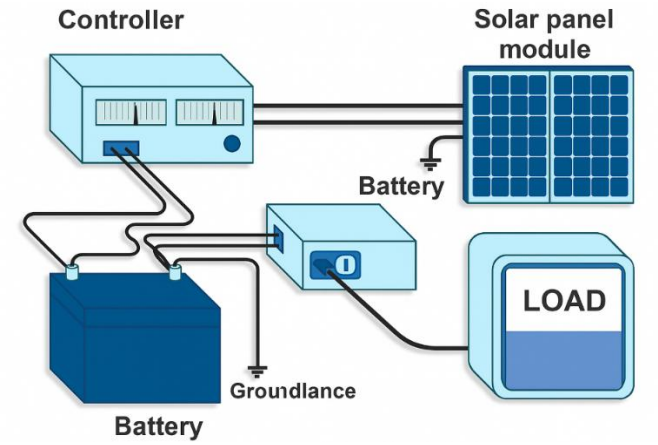

Figure 3 - Scheme of an autonomous solar power plant

Conclusions. The demand for renewable energy sources (RES) is constantly growing, and according to forecasts, by 2050 their share in the global energy balance will reach 35%. The main advantages of RES are their environmental friendliness, inexhaustibility and energy security. Therefore, their development serves not only to protect the environment, but also to preserve energy resources for future generations and reduce raw material consumption.

Solar panels are one of the types of RES, which directly generate electricity through the photovoltaic effect. The power of the panels is determined by the sunlight falling on the surface of the module, and the modules are connected in series or parallel. When connected in series, differences in characteristics between the modules lead to power losses, and a shaded module can also cause a "hot spot" effect. These problems can be eliminated using shunt and blocking diodes.

Thus, renewable energy sources, particularly solar energy, will play an important role in creating a sustainable, efficient, and environmentally friendly energy supply system in the future.

References

1. Boyle, G. Renewable Energy: Power for a Sustainable Future. 5th Edition. Oxford University Press, 2021.

2. Twidell, J., Weir, T. Renewable Energy Resources. 3rd Edition. Routledge, 2015.

3. Kalogirou, S. A. Solar Energy Engineering: Processes and Systems. 3rd Edition. Academic Press, 2014.

4. Boyle, G., Everett, B., Ramage, J. Energy Systems and Sustainability: Power for a Sustainable Future. Oxford University Press, 2018.