INTELLIGENT APPROACHES TO IDENTIFYING FAULTS IN ELECTRICAL DRIVES

Usmonov Shukurillo Yulbarsovich, *dotsent,*
murodilxon07@gmail.com
Farg'ona davlat texnika universiteti

Abstract. *The article presents the properties of fault detection in electric circuits using artificial intelligence control modules. The extents of energy consumption minimization of the processes taking place in them, and the extent of failure prediction are determined through an artificial neural network. At the same time, a failure prediction algorithm was developed to increase and improve the operation of electrical equipment in economical mode, thereby enhancing the reliability of industrial equipment. Schemes of a system based on fault detection have been developed for the detection of electrical faults and the analysis of the diagnostic monitor based on an intellectual approach. These developments aim to ensure efficient and reliable functioning of electrical systems.*

Annotatsiya. *Maqolada sun'iy intellekt boshqaruv modullaridan foydalangan holda elektr zanjirlaridagi nosozliklarni aniqlash xususiyatlari yoritilgan. Ularda kechadigan jarayonlarning energiya iste'molini kamaytirish darajasi hamda nosozliklarni oldindan bashorat qilish imkoniyati sun'iy neyron tarmog'i yordamida aniqlangan. Shu bilan birga, elektr jihozlarining iqtisodiy rejimda ishlashini oshirish va takomillashtirish, natijada sanoat uskunalarining ishonchliligini kuchaytirish maqsadida nosozliklarni bashorat qilish algoritmi ishlab chiqildi. Intellektual yondashuv asosida elektr nosozliklarini aniqlash hamda diagnostika monitoringini tahlil qilish uchun nosozliklarni aniqlashga asoslangan tizim sxemalari ishlab chiqilgan. Ushbu ishlanmalar elektr tizimlarining samarali va ishonchli ishlashini ta'minlashga qaratilgan.*

Аннотация*. В статье представлены особенности обнаружения неисправностей в электрических цепях с использованием управляющих модулей искусственного интеллекта. Степень минимизации энергопотребления процессов, происходящих в них, а также уровень прогнозирования отказов определяются с помощью искусственной нейронной сети. Одновременно был разработан алгоритм прогнозирования отказов для повышения эффективности и улучшения работы электрического оборудования в экономичном режиме, что способствует повышению надежности промышленного оборудования. Разработаны схемы системы, основанной на обнаружении неисправностей, для диагностики электрических отказов и анализа диагностического мониторинга на основе интеллектуального подхода. Эти разработки направлены на обеспечение эффективного и надежного функционирования электрических систем.*

Keywords. *Electric drive, asynchronous motor, artificial intelligence, electric drive failure, economical mode, diagnostics.*

Kalit so'zlar. *Elektr yuritma, asinxron dvigatel, sun'iy intellekt, elektr yuritma nosozligi, iqtisodiy rejim, diagnostika.*

Ключевые слова. *Электропривод, асинхронный двигатель, искусственный интеллект, отказ электропривода, экономичный режим, диагностика.*

Introduction. It is known that the machinery and mechanisms are mainly driven by electric drives. About 70% of the electricity produced in the world is consumed by electric vehicles. Today, it is important to reduce the energy consumption of the enterprise, to increase the reliability of electrical systems, and to forecast. Research aimed at improving reliability by monitoring and forecasting the state of electrical installations can prevent the enterprise from failing electrical equipment [1]. In particular, it is an important task to reduce energy consumption by forecasting and improving the reliability of electrical systems of textile enterprises based on technical requirements.

Scientific research aimed at optimal management of electric vehicles in the world, speed adjustment, failure forecasting, development of improved reliability, minimization of energy consumption based on the described methodology, development of algorithms taking into account variable parameters, and determination of dynamic and energetic indicators is being conducted [2]. In this direction, research on improving the efficiency and reliability of electric drives by optimizing the operation of electric drives to minimize energy consumption based on input power, torque and speed, using artificial intelligence control modules, remains a priority. Efficient operation of the electrical system plays an important role in reducing energy consumption and high performance of the system. But there are a number of problems below that affect the efficiency of the electric drive system:

Low reliability of electric drives: To improve the reliability of the electric drive system, fault detection and diagnostics are carried out for asynchronous motors in various existing manufacturing plants. However, taking into account a small number of signals to detect anomalies (deviations, deviations from the norm) leads to a decrease in reliability. On the other hand, traditional algorithms are considered, which cause several problems in terms of low convergence speed, low accuracy, and high complexity.

Poor Power Quality: To improve power quality and reduce power losses, power factor improvement is done in existing works considering current or voltage. Also, the reason for the low power factor is not explained. This leads to power loss and reduced power quality.

Low system performance: Few existing research studies have performed fault diagnosis for failures and specific types of errors. This makes it less helpful for manufacturing enterprises to prevent failures in electrical components in time. Thus, these indicators reduce the efficiency of the system.

It is known that in the development of the classification of electrical system failures, it is necessary to determine the probability of failure of the electric system and the electric motor. The classification of faults was determined as a result of experimental results and research of scientists. In this case, according to Table 1, damage to the engine cover is 85-95%, which is an indicator of high failure.

It is necessary to organize signals in the hidden layers [4], [5] of mathematical expressions based on artificial neural networks in the detection of faults in electrical circuits based on an intellectual approach. This indicator classifies the reliability of the electric drive based on the information of the hidden layer based on the initial values included in the artificial neural networks.

Variables in the organization of a mathematical model.

A. Electrical and mechanical fault detection.

The input and output signals of the artificial neural network form threshold values through the detection of errors and the activity of the change function in it.

Neural network parameter indicators were used to facilitate the use of diagnostic methods and to reduce the number of signals in them to a minimum. The method of intelligent diagnostics differs from other methods by its precise indicator and the small number of signals. One of the methods that can be used in cases when the consumption indicator exceeds the nominal mode by 3% is the intelligent diagnostic method, which works on the basis of electrical and mechanical failure with the C-Resnet indicator based on the previously developed ID2PGA algorithm (Fig. 1).

Table-1

Expressions in the mathematical model [3]

Malfunctions	Failure %	Expressions in a mathematical model
In asynchronous motors		
Damage to the engine compartment	85...95%	$\frac{di_{1\alpha}}{dt} = \frac{1}{\sigma \cdot L_1} \cdot U_{1\alpha} - \frac{R_э}{\sigma \cdot L_1} \cdot i_{1\alpha} + \frac{R_2' \cdot L_m}{\sigma \cdot L_1 \cdot L_2^2} \cdot \Psi_{2\alpha} + \frac{L_m}{\sigma \cdot L_1 \cdot L_2} \cdot z_p \cdot w \cdot \Psi_{2\beta}$
Damage to bearings	5...8%	$M_м = \frac{3}{2} \cdot \frac{L_m}{L_2} \cdot z_p \cdot (\Psi_{2\alpha} \cdot i_{1\beta} - \Psi_{2\beta} \cdot i_{1\alpha})$; $\frac{dw}{dt} = \frac{1}{J} \cdot (M_м - M_c)$
Insulation heating	3%	$T_{r\,izolyat} = T_{r0} \cdot e^{-\beta\theta}$ $T_r -$ insulation service life; $T_{r0} - 0^0$ C the service life of the insulation; $\beta -$ coefficient 0,0625...0,0808; $\theta -$ insulation temperature value
In operational condition	70 %	Probability of failure of an electric motor with an exponential distribution over time $P(t) = 1 - F(t) = 1 - Q(t) = e^{-\alpha_0 t} = e^{-\sum_{i=1}^{n} \alpha_i t}$ $P(t) = \prod_{i=1}^{n} P_n(t_n) = \prod_{i=1}^{n} [1 - Q_i(t_i)]$ $n -$ number of factors affecting reliability

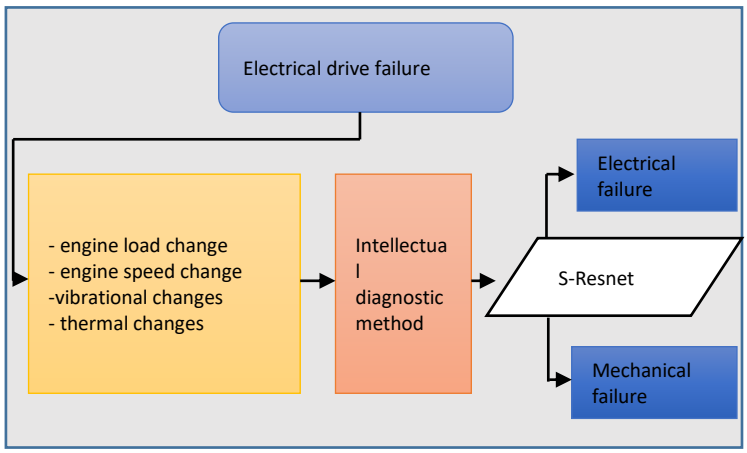

Figure 1. Expression of variables in the organization of a mathematical model

Based on engine load changes, engine speed changes, vibration changes, and thermal changes, the S-Resnet agent uses a diagnostic method to isolate the type of failure. That is, the failure will have an electrical or mechanical nature. This increases the speed of fault detection in the electrical system.

A system can be developed based on the model according to Table 1 and Figure 1. In this case, the model was organized by taking into account the mathematical equations of the electrical circuit and the variables in them. With the help of the model, it was considered that a change in voltage causes a change in the angular frequency. Based on the obtained results, it is important to

analyze the moment that causes the change in speed. The algorithm is organized by accepting the torque based on the value of the change. In this case, using mathematical equations to represent electrical and mechanical failures, the following is adopted:

$$M_{эм} = \frac{3}{2} \cdot \frac{L_m}{L_2} \cdot z_p \cdot \left(\Psi_{2\alpha} \cdot i_{1\beta} - \Psi_{2\beta} \cdot i_{1\alpha}\right) \quad (1)$$

$$\frac{di_{1\alpha}}{dt} = \frac{1}{\sigma \cdot L_1} \cdot U_{1\alpha} - \frac{R_э}{\sigma \cdot L_1} \cdot i_{1\alpha} + \frac{R_2' \cdot L_m}{\sigma \cdot L_1 \cdot L_2^2} \cdot \Psi_{2\alpha} + \frac{L_m}{\sigma \cdot L_1 \cdot L_2} \cdot z_p \cdot w \cdot \Psi_{2\beta} \quad (2)$$

$$\frac{di_{1\beta}}{dt} = \frac{1}{\sigma \cdot L_1} \cdot U_{1\beta} - \frac{R_э}{\sigma \cdot L_1} \cdot i_{1\beta} + \frac{R_2' \cdot L_m}{\sigma \cdot L_1 \cdot L_2^2} \cdot \Psi_{2\beta} - \frac{L_m}{\sigma \cdot L_1 \cdot L_2} \cdot z_p \cdot w \cdot \Psi_{2\alpha} \quad (3)$$

$$\frac{d\Psi_{2\alpha}}{dt} = -\frac{R_2'}{L_2} \cdot \Psi_{2\alpha} + \frac{R_2' \cdot L_m}{L_2} \cdot i_{1\alpha} - z_p \cdot w \cdot \Psi_{2\beta} \quad (4)$$

$$\frac{d\Psi_{2\beta}}{dt} = -\frac{R_2'}{L_2} \cdot \Psi_{2\beta} + \frac{R_2' \cdot L_m}{L_2} \cdot i_{1\beta} - z_p \cdot w \cdot \Psi_{2\alpha} \quad (5)$$

$$\frac{dw}{dt} = \frac{1}{J} \cdot (M_{эм} - M_c) \quad (6)$$

On the basis of electromechanical equations (1-6), the quantities that cause the level of damage to the intestine are organized based on the approach of reflecting the changes in the model. That is, it was taken into account in the classification of input signals through an artificial neural network. And the output signal is determined by the magnitude representing the fault classification. This allows you to express the error of the faults. In electrical systems, artificial neural networks are distinguished by the possibility of application in autonomous control, control planning, calculation and other parts [6,7]. These neural networks simulate pre-input information to perform tasks including prediction, fault registration, approximation and control.

Table-2

Table type styles

Function	Gradiyent	Number of periods	Number of failures
Border	$3.6 \cdot 10^{-13}$	-	10295
Sigma-like	4	4200	178
Tangential	1.7	468	14

These expressions are important in determining the integral indicator of electrical conductivity. Based on the function gradient and the number of cycles in the neural network, the number of integral values of electrical faults was determined (Table 2). The possibility of determining the integral value of up to 10295 faults was proved based on the representation of the boundary function in the organized mathematical model.

B. The structure of an artificial neuron in electrical conduction. Among the activation functions, the limit function, which can detect a large number of faults, is distinguished by the absence of the number of cycles.

In the hidden layer of the generalized database in the technology of creation of expert systems, the torque change that causes the electrical fault condition is presented. The principles and examples of the development of expert systems for the management of electric vehicles are considered in works [9-11].

The structure of the artificial neural network is represented by the coefficients of 1.1-1.6 in the case of circular input signals, i.e. b, X1, X2, X3, X4,....X5. Based on the output signal, the dw/dt expression is classified in the desired section.

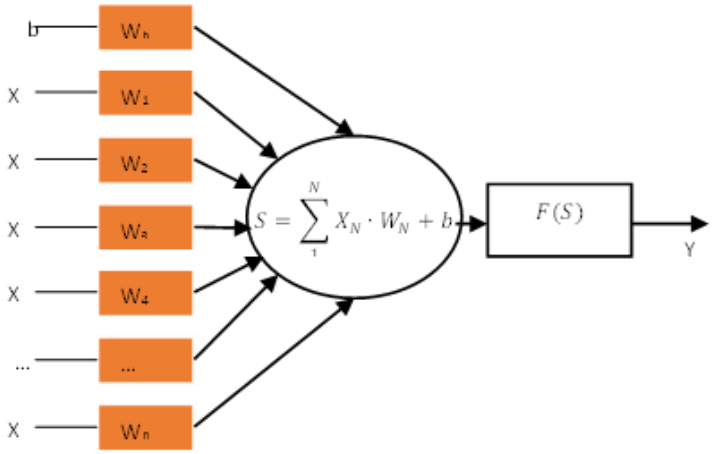

Figure 2. The structure of an artificial neuron

The activation function F(S) of the neuron (Figure 2) determines the nonlinear task detection and failure prediction performed by the neuron. Today, many activation functions are widely used in practice. It is known that the linear and boundary functions, which are widely used now, are simple methods [8]:

A linear function. Based on the image presented in Fig. 3 a, it is determined according to the following condition (7):

$$F(S) = \begin{cases} 1, or\ S \geq 0 \\ 0, or\ S < 0 \end{cases} \quad (7)$$

The boundary function is determined based on the image presented in Fig. 3 b according to the following condition (8):

$$F(S) = \begin{cases} 1, or\ S \geq 0 \\ S, or\ a > S > -a \\ -1, or\ S < -a \end{cases} \quad (8)$$

On the basis of the activation function, it is possible to create a signal representation of the neural network and make it the desired representation of the constant variable values.

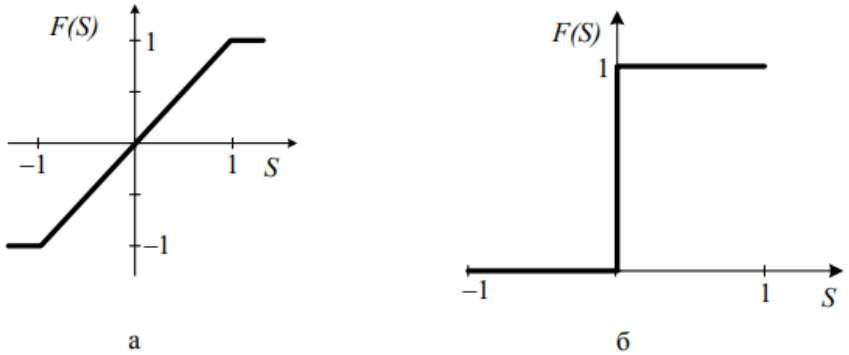

Figure 3. Types of activation functions
a) - linear; b) - limit

In the electric drive, the fault classification is obtained through the activation function of fault detection and the expressions 1-6 above. In a neural network, the threshold function is distinguished from other functions by representing 10,295 faults.

As a result of the analysis of electromechanical and electromagnetic processes in electric drive, it is possible to establish the following: absolute slip, give the stator current module and ensure that the frequency remains unchanged when the control effect is unchanged [9,10]. Also, when the torque of the load on the AD rotor is variable, the electric current is expressed on the basis of a step load, which is described by a linear function.

The development of cost-effective operating modes of adjustable asynchronous electric drives with modern electric drives is carried out on the basis of the value of accurate indication of faults. In this case, the artificial neural network will be able to receive the necessary information through electrical conduction. The variables of the mathematical model are expressed by fitting the neuron to the conductance of F(S).

Installation of control in electrical circuits. Based on the analysis, it is possible to create a mathematical model for electrical operations based on the main properties of the artificial neural network. This is done in an accelerated way. Taking into account the level of complexity, a neural network scheme was developed for electrical control taking into account uncontrolled variables (Fig. 4).

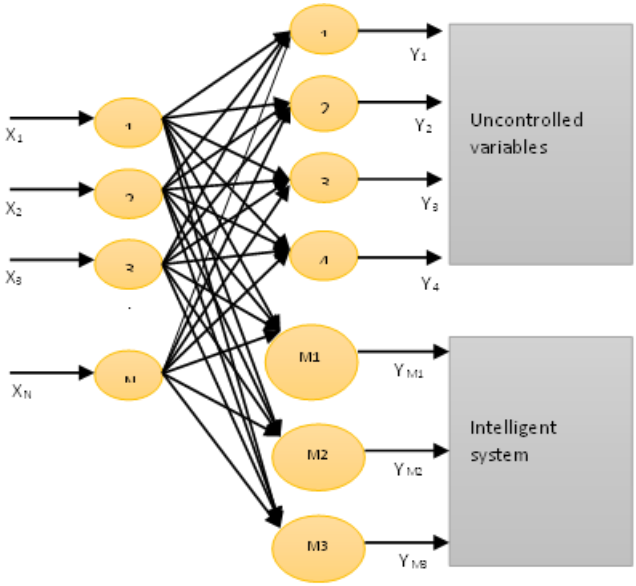

Figure 4. Scheme of an artificial neural network for single-layer electrical conduction

The uncontrolled variables presented in Figure 4 did not affect the failure of the electrical system. But in turn, these indicators require functional electrical management schemes.

Functional schemes are determined by parameters that need to be adjusted and controlled. A model is created on the basis of functional schemes of electrical circuits, and a discrete interpretation of the initial conditions is shown in practice.

As an initial condition (Fig. 5), a coefficient that is prearranged, included in the algorithm and serves to generate the fault is introduced.

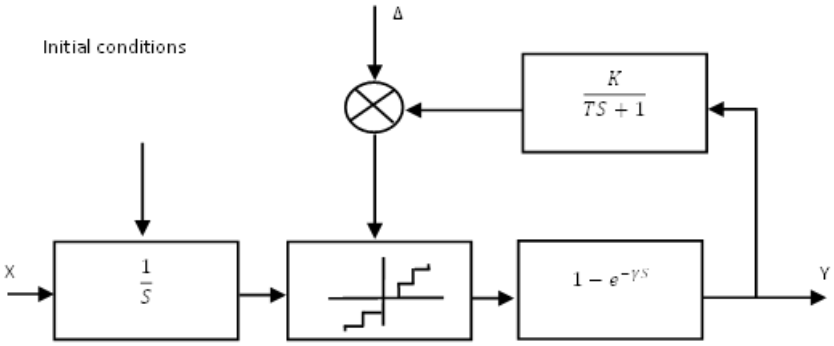

Figure 5. Discrete element of pulse frequency initial conditions

Based on the equations, there is an analytical functional scheme of direct self-control in the control system of the electric drive. Based on the functional scheme of direct self-control by torque (Fig. 6), the initial condition of the pulse frequency is discretely determined based on the neural network algorithm when the torque value changes from 0.25% to 3% changes to a value.

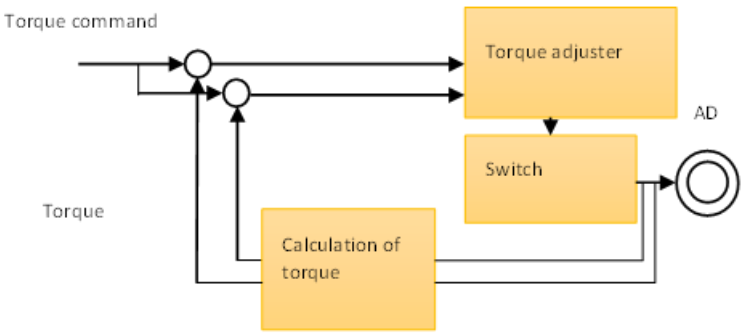

Figure 6. Functional diagram of direct self-control by torque

The scheme of direct self-control with speed estimation is shown in Fig. 7. Based on the equations and control of the speeds of the electrical drives of the looms, a functional scheme was developed (Fig. 7).

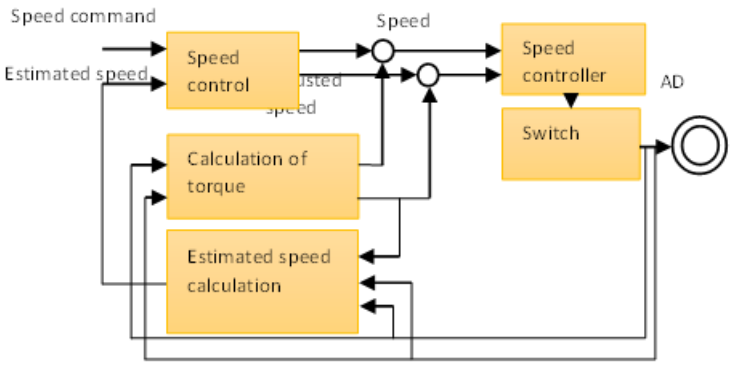

Figure 7. Functional scheme of direct self-control with speed estimation

The direction of speed control is determined by the location of the obtained artificial features relative to the natural ones. If they are located above the natural, then the speed is regulated from the main one, if it is lower than the main one, then the speed is regulated. The location of artificial features both above and below the natural one provides a two-zone arrangement.

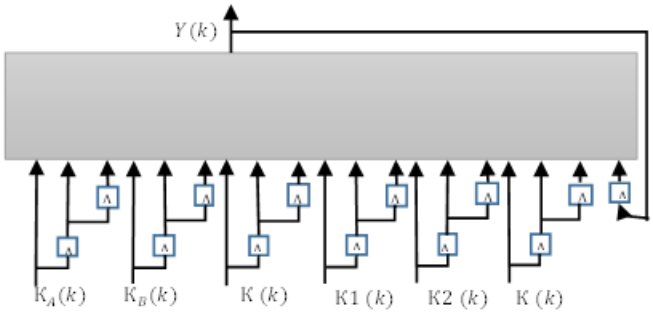

Figure 8. Scheme of input data preparation for a neural network tracker of the angular velocity of an induction motor

Resulting values. Neural control is designed to control an induction motor with the advantage of parallel computing, a neural network is used to reduce the controller time delay caused by complex computation.

Table-3

Neural network variables

№	W_{1k}	W_{2k}	W_{3k}	W_{4k}	W_{5k}	W_{6k}	W_{7k}
1	-0.3710	-0.380	-0.405	0.1240	0.119	0.1050	0.10529
2	0.3558	0.390	0.410	-0.0700	-0.030	0.2060	0.10780
3	0.1460	0.114	0.956	0.5455	4.153	0.8821	0.89850
4	-0.3219	-0.280	-0.305	0.1250	0.145	0.1150	0.10628

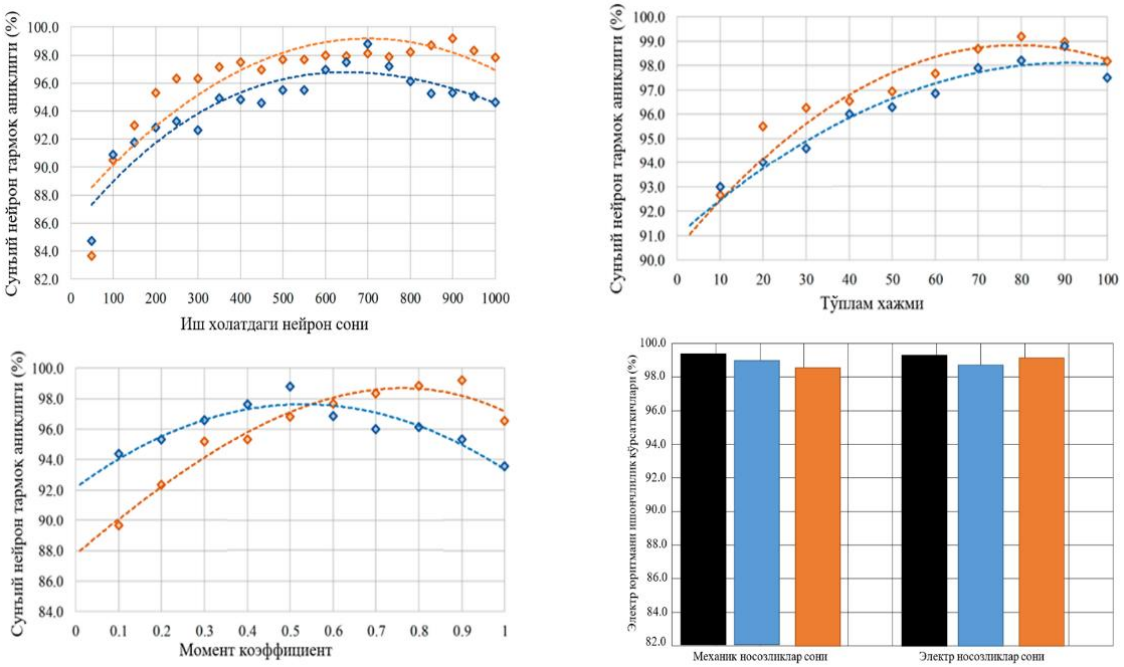

Figure 9. The influence of electrical parameters on the efficiency of artificial neural network structures: (a) the number of neurons in the working state; (b) batch size; c) torque coefficient; (d) intellectual method

The degree of precision of artificial neural networks is represented by input signals, precision signals, concatenation signals, concatenation signal and output signals. In this case, accuracy signals can be organized on the basis of a mathematical model:

$$x_j^l = f\left(\sum_{i\in M_j} x_i^{l-1}\cdot k_{ij}^l + b_j^l\right) \quad (9)$$

here *f*- frequency of input to electrical conduction; M_j-load moment; $x_i^{l-1}, k_{ij}^l, b_i^l$ -input signals.

Real-time management is an intelligent system that is a part of modern management taking into account variable coefficients. This is the formula below when the control system requires the development of energy variable parameters or a model of energy equipment.

$$\begin{cases} \frac{d\omega_0}{dt} = \frac{2}{3}\frac{p}{2J}(\lambda_{d\mu}^s i_{qs}^s - \lambda_{q\mu}^s i_{ds}^s \\ \frac{d\lambda_{d\mu}^s}{dt} = -R_s i_{ds}^s + V_{ds}^s \\ \frac{d\lambda_{q\mu}^s}{dt} = -R_s i_{qs}^s + V_{qs}^s \\ \frac{di_{ds}^s}{dt} = -k_g\left(L_\mu R_R + L_R R_s\right)i_{ds}^s + \frac{p}{2}\omega_0 i_{qs}^s + k_g R_R \lambda_{d\mu}^s + \frac{p}{2}k_g\omega_0\lambda_{q\mu}^s + k_g L_R V_{ds}^s \\ \frac{di_{qs}^s}{dt} = -k_g\left(L_\mu R_R + L_R R_s\right)i_{qs}^s + \frac{p}{2}\omega_0 i_{ds}^s + k_g R_R \lambda_{q\mu}^s + \frac{p}{2}k_g\omega_0\lambda_{d\mu}^s + k_g L_R V_{qs}^s \end{cases}$$

here $k_g = \frac{1}{L_\mu^2 - L_\mu R_R}$ – coefficient

$T = \frac{2}{3}\frac{p}{2J}(\lambda_{d\mu}^s i_{qs}^s - \lambda_{q\mu}^s i_{ds}^s)$- Electromagnetic torque

Control systems of electric drives require control of the dynamic processes in them directly represented by existing electric motors. Calculations of parameters in the stator of an electric motor are represented by its equivalent circuit. The asynchronous motor model (9) based on the equivalent circuit "G" in the stator system is expressed as a fifth-order equation.

$$\begin{cases} \frac{dw_0}{dt} = \frac{2}{3}\frac{PL_M}{2JL_r}\left(\lambda^s{}_{dr} i^s{}_{qs} - \lambda^s{}_{qr} i^s{}_{ds}\right) - \frac{T_L}{J} \\ \frac{d\lambda^s{}_{dr}}{dt} = -\frac{R_r}{L_r}\lambda^s{}_{dr} - \frac{P}{2}w_0\lambda^s{}_{qr} + \frac{R_r L_M}{L_r} i^s{}_{ds} \\ \frac{d\lambda^s{}_{qr}}{dt} = -\frac{R_r}{L_r}\lambda^s{}_{qr} + \frac{P}{2}w_0\lambda^s{}_{dr} + \frac{R_r L_M}{L_r} i^s{}_{qs} \\ \frac{di^s{}_{ds}}{dt} = \frac{L_M R_r}{(L_r L_s - L^2{}_M)L_r}\lambda^s{}_{dr} + \frac{PL_M}{2(L_r L_s - L^2{}_M)}w_0\lambda^s{}_{qr} - \frac{L^2{}_M R_r + L^2{}_r R_s}{(L_r L_s - L^2{}_M)L_r} i^s{}_{ds} + \frac{L_r}{(L_r L_s - L^2{}_M)}V^s{}_{ds} \\ \frac{di^s{}_{qs}}{dt} = \frac{L_M R_r}{(L_r L_s - L^2{}_M)L_r}\lambda^s{}_{dr} - \frac{PL_M}{2(L_r L_s - L^2{}_M)}w_0\lambda^s{}_{dr} - \frac{L_M{}^2 R_r + L^2{}_r R_s}{(L_r L_s - L^2{}_M)L_r} i^s{}_{qs} + \frac{L_r}{(L_r L_s - L^2{}_M)}V^s{}_{qs} \end{cases} \quad (10)$$

In equation (10), rotor speed ω_0, stator currents $\lambda_{d\mu}^s$ $\lambda_{q\mu}^s$, stator current flows $i_{d\mu}^s$ $i_{q\mu}^s$, rotor inertia J, stator and rotor inductances (L_m, L_R), stator and rotor resistances (R_s, R_R) and the number of poles p, voltages $V_{d\mu}^s$ $V_{q\mu}^s$ and T_L loading torque parameters are given.

As a result of the processing of the equation (9), it is controlled using the associative memory (10), which contains the data set of the electric drive control. The whole process is carried out with protective equipment. Losses in the element:

$$P_{\varepsilon} = I^2 r_{э0}(1 + \alpha_э \tau_э) \quad (11)$$

where I is the controlled current; $r_{э0}$ - the initial internal resistance of the heated element; $\alpha_э$is the temperature coefficient of the resistance of the heating material; $\tau_э$- heating temperature.

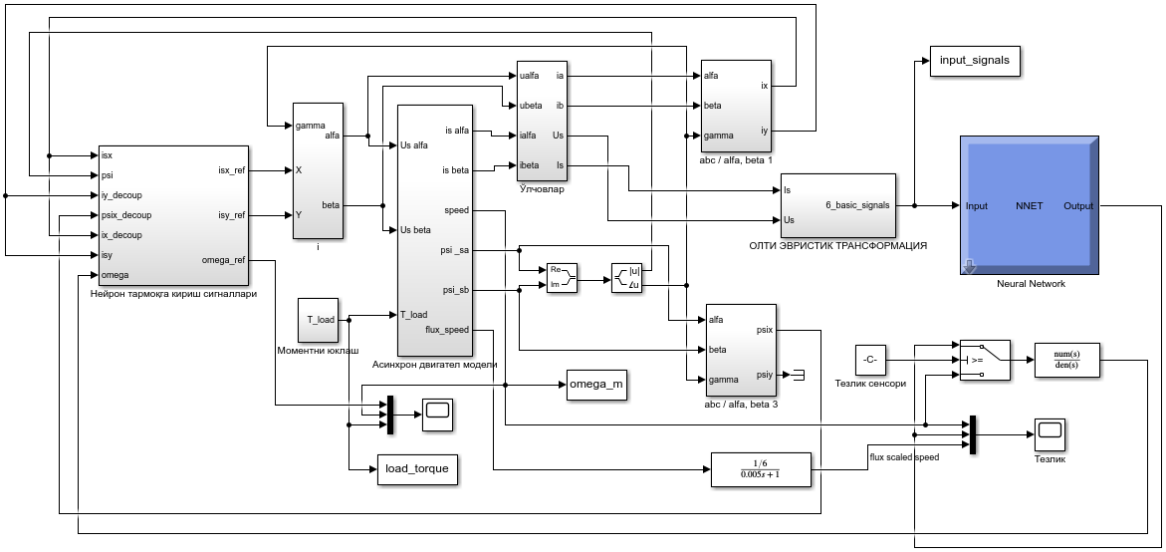

Figure 10. Model of operational reliability of electric vehicles

Taking into account the above mathematical expressions and simulation results, a model was developed to monitor and control the operational reliability of the electric drive.

Based on the model, PID Controller (flux), PID Controller (ix), Neural Network, and six heuristic transformations were obtained on the basis of integrated indicators.

The model was developed through a Neural Network (artificial neural network) based on 3 hidden layers through 2 variables, i.e., the load torque of the electric drive of the loom and the linear speed of the thread moving to the execution point (Fig. 11).

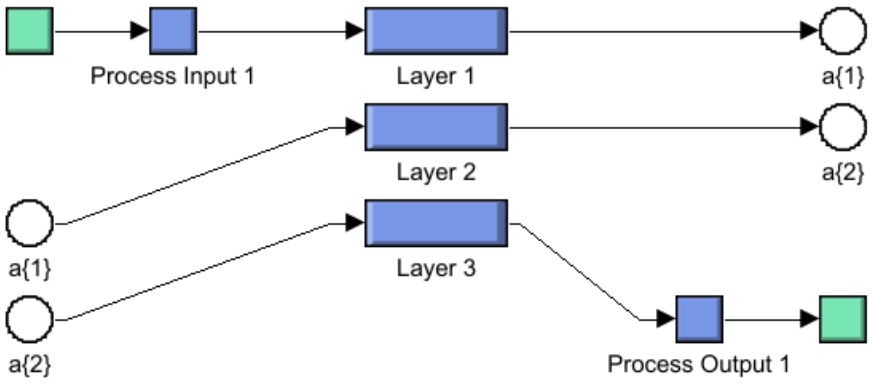

Figure 11. Model of operational reliability of electric vehicles through artificial neural network

Even with proper control setup and location, the fault finding performance was determined due to variations in vibration, operating speed, input voltage, and motor load. According to experience, it has been proven that the possibility of erroneously displaying the fault indicator of the electrical system when detecting mechanical faults is very high.

The main task of the artificial neural network is to extract high-level features from the analyzed signal using convolutional operations. The algorithm constructed using this network is organized on the basis of the methods of selection of parameters and the requirements for the number of convolutional layers. The level of fault elimination can be increased with the introduction of each additional convolutional layer of the artificial neural network structure. In the study, in the diagnostic process of the artificial neural network, the first layer is presented as the main feature filter, and based on the maximum and minimum values of the factors affecting the electrical reliability, it is directed to the next layer.

Conclusion. As a result of the above research, a working structural diagram of the reliability method based on the electric conduction neural network was developed. As a result, it was found appropriate to use the neural network method by s-resnet, an error detection department based on the vibration, voltage, speed, temperature, and torque values of the electrical system.

A neural network method was developed on the basis of an intellectual approach, in contrast to traditional methods of increasing reliability. As a result, it was possible to determine the causes of electrical failure in advance. Based on the values in Table 4, it has been proven that the use of the neural network method is more effective than the traditional method of electric circuit failure probability.

References

1. M. Skowron, T. Orlowska-Kowalska, M. Wolkiewicz, and C. T. Kowalski, “Convolutional neural network-based stator current data-driven incipient stator fault diagnosis of inverter-fed induction motor,” Energies, vol. 13, no. 6, p. 1475, Mar. 2020, doi: 10.3390/en13061475.

2. N.S. Ivanov, et al., “Electric Machines with High Specific Power,” Russian Electrical Engineering, vol. 93, pp. 621–630, 2022, doi: 10.3103/S1068371222100054.

3. D. Golovanov, et al., “The Influence of Stator Material on the Power Density and Iron Loss of a High-Performace Starter-Generator for More Electric Aircraft,” 2018 21st International Conference on Electrical Machines and Systems (ICEMS), Jeju, Korea (South), 2018, pp. 169-173, doi: 10.23919/ICEMS.2018.8549390.

4. L. Zhang, J. Lin, and R. Karim, “An angle-based subspace anomaly detection approach to high-dimensional data: With an application to industrial fault detection,” Reliability Engineering & System Safety, vol. 142, pp. 482–497, Oct. 2015, doi: 10.1016/j.ress.2015.05.025.

5. S. Verifier and A. Drive, Simulink ® Verification and Validation TM Reference. 2015.

6. Murodil Madaliev, Mavlonbek Usmonov, Zuhriddin Umirzakov, Shukurillo Usmonov,

7. Muslimbek Ismoilov, Zarifjon Adilov, and Nigora Alimova “ Comparison modern of turbulence models for the 2D NASA wall-mounted hump separated flow problem” E3S Web of Conferences 538, 01013 (2024) https://doi.org/10.1051/e3sconf/202453801013

8. Shukurillo Usmonov, Atif Iqbal, Adeel Saleem, Kholiddinov Ilkhombek Khosiljonovich, Uzbekov Mirsoli Odiljanovich, Eraliev Khojiakbar Abdinabi Ugli, Mamadaliev Musulmonkul Imomali Ugli “ Modelling and implementation of a photovoltaic system through improved voltage control mechanism” International Journal of Power Electronics and Drive Systems (IJPED) Vol, 15, 412-421.

9. Usmonov Shukurillo Yulbarsovich, Sultonov Ruzimatjon Anvarjon Ugli, Mamadaliev Musulmonkul Imomali Ugli, Adeel Saleem, Kuchkarova Dilnoza Toptiyevna “ Increase the operational reliability of the electric drive of the weaving machine” International Journal of Power Electronics and Drive Systems (IJPEDS) Vol. 15, No. 2, June 2024, pp. 704-714.

10. Muhammad Adnan Samad, Usmonov Shukurillo Yulbarsovich, Sultonov Ruzimatjon Anvarjon Ugli, Saima Siddiqui “Advanced control and optimization strategies for a 2-phase interleaved boost converter” Indonesian Journal of Electrical Engineering and Computer Science (IJEECS) p-ISSN: 2502-4752, e-ISSN: 2502-4760, https://doi.org/10.11591/ijeecs.v36.i3.pp1421-1429