DOI: 10.65322/j.srd.02162026.35

TUKLI CHIGITLARNI SARALASH UCHUN ELEKTR SARALAGICH QURILMANING RELE HIMOYASI VA AVTOMATIKASINI ISHLAB CHIQISH NATIJALARI

Usmonov I.I., *PhD, Associate Professor,*
Head of the Department of Electrical Technologies,
Mingboyeva M.I., *2nd-year Master's Student,*
Kokand State University

Annotatsiya: *Mazkur ilmiy maqolada qishloq xo'jaligi mahsulotlarini qayta ishlash jarayonida qo'llaniladigan tukli chigitlarni saralash uchun elektr saralagich qurilmaning rele himoyasi va avtomatikasi tizimlarini tadqiq etish masalalari yoritilgan. Zamonaviy paxta tozalash sanoatida chigit sifatini yaxshilash, saralash jarayonining aniqligi va samaradorligini oshirish muhim ahamiyatga ega bo'lib, bu jarayonda elektr saralagich qurilmalar keng qo'llaniladi. Ushbu qurilmalarning uzluksiz va xavfsiz ishlashini ta'minlash uchun rele himoyasi va avtomatika tizimlari asosiy rol o'ynaydi. Tadqiqotda elektr saralagich qurilmaning texnologik ishlash prinsipi, uning elektr ta'minoti tizimi, rele himoya vositalari va avtomatik boshqaruv algoritmlari o'rganildi. Shuningdek, ortiqcha yuklama, qisqa tutashuv va kuchlanish o'zgarishlariga qarshi himoya mexanizmlari tahlil qilindi. Tadqiqot natijalari rele himoyasi va avtomatika tizimlarini optimallashtirish orqali qurilmaning ishlash samaradorligini oshirish, energiya sarfini kamaytirish va nosozliklarning oldini olish mumkinligini ko'rsatdi.*

Abstract: *This scientific article addresses the research and development of relay protection and automation systems for electric sorting devices utilized in agricultural processing. In the modern cotton cleaning industry, improving seed quality and enhancing the precision and efficiency of the sorting process are of paramount importance. Electric sorting devices are widely implemented for this purpose. To ensure the continuous and safe operation of these units, relay protection and automation systems play a fundamental role. The study examines the technological operating principles, power supply systems, protection instruments, and automatic control algorithms of the electric sorter. Furthermore, protection mechanisms against overloads, short circuits, and voltage fluctuations were analyzed. The research results indicate that optimizing relay protection and automation systems significantly enhances operational efficiency, reduces energy consumption, and prevents technical failures.*

Аннотация: *В данной научной статье рассматриваются вопросы исследования и разработки систем релейной защиты и автоматики для электрических сортировочных устройств, применяемых в процессе переработки сельскохозяйственной продукции. В современной хлопкоочистительной промышленности улучшение качества семян, а также повышение точности и эффективности процесса сортировки имеют первостепенное значение, в связи с чем электрические сортировочные установки находят широкое применение. Системы релейной защиты и автоматики играют ключевую роль в обеспечении непрерывной и безопасной работы этих устройств. В ходе исследования были изучены технологический принцип работы электрического сортировщика, его система электроснабжения, средства релейной защиты и алгоритмы автоматического управления. Также были проанализированы механизмы защиты от перегрузок, коротких замыканий и колебаний напряжения. Результаты исследования показали, что оптимизация систем релейной защиты и автоматики позволяет значительно повысить эффективность работы устройства, снизить энергопотребление и предотвратить возникновение технических неисправностей.*

Kalit so'zlar: *elektr saralagich, tukli chigit, rele himoyasi, avtomatika, qishloq xo'jaligi texnologiyasi, energiya samaradorligi, avtomatik boshqaruv, himoya tizimi.*

DOI: 10.65322/j.srd.02162026.35

Keywords: *electric separator, fuzzy cotton seed, relay protection, automation, agricultural technology, energy efficiency, automatic control, protection system.*

Ключевые слова: *электрический сортировщик, опушенные семена хлопчатника, релейная защита, автоматика, сельскохозяйственные технологии, энергоэффективность, автоматическое управление, система защиты.*

Introduction. It is well-established that sorting agricultural seeds within an electric field offers significant advantages over mechanical and pneumatic methods. The electric field interacts with the seeds based on their physical and mechanical properties, applying a directed force that enables sorting according to mass, geometric dimensions, density, electrical resistance, dielectric permittivity, and other critical characteristics [1-4]. Consequently, seed fractions are separated into high-quality groups with uniform biological indicators, leading to higher germination rates in both laboratory and field conditions, as well as increased potential yield. Additionally, the electric field has a beneficial physiological effect on the seeds, ensuring uniform germination, accelerating seedling development, and promoting earlier crop maturation.

The implementation of modern technologies in agricultural processing allows for improved product quality, production efficiency, and rational resource management. In cotton processing, sorting fuzzy seeds is a vital stage, as seed quality directly influences subsequent technological processes [5-6]. Electric sorting devices automate this process, increasing precision and reducing human error. However, the effective performance of these devices depends on the stability and protection of their electrical systems. Relay protection and automation systems are essential for safeguarding equipment against overloads and short circuits while facilitating automated control [7-8]. The relevance of this study is determined by the need to increase the operational reliability of electric sorters, optimize energy consumption, and minimize technical downtime. The primary objective is to scientifically analyze and develop recommendations for enhancing relay protection and automation systems in fuzzy seed sorting equipment.

Methods. The research utilized systematic analysis, electrotechnical modeling, experimental observation, and statistical analysis methods. The operating principle and electrical circuit of the sorting device were investigated, focusing on energy flow and load distribution. Protection systems were studied by modeling device behavior under conditions of short circuits, overloads, and voltage fluctuations. Furthermore, automatic control algorithms were developed, and their efficiency was evaluated. Within the framework of the methodology, operational parameters were monitored using sensor data to derive analytical conclusions.

Results. Selecting the optimal power for the electric motor that drives the working organ of the fuzzy cotton seed sorter is critical. The efficient, reliable, and stable operation of the device directly depends on the correctly chosen motor capacity.

Insufficient motor power leads to overheating and failure to maintain a steady operating rhythm. Conversely, an oversized motor increases energy consumption from the grid, thereby raising the unit cost of sorted seeds. Additionally, excessive power can lead to a decrease in the Efficiency (EFF) and Power Factor of the motor. Therefore, it is necessary to select a motor that meets the exact energy requirements of the sorting process.

The power requirement of the electric device was measured using a K-505 measuring instrument, which allows for phase-by-phase determination of power consumption. The total power consumption of the experimental prototype was determined using the following expression [9]

$$P=P_A+P_B+P_C, \quad (1)$$

DOI: 10.65322/j.srd.02162026.35

"Where P_A, P_B, and P_C represent the power consumed by phases A, B, and C, respectively (kW). By measuring the phase-by-phase power drawn from the grid and substituting the obtained results into formula (1), the total power consumption of the device can be determined.

Figure 1 illustrates the circuit diagram for measuring the required power of the electrical device using the K-505 measuring instrument."

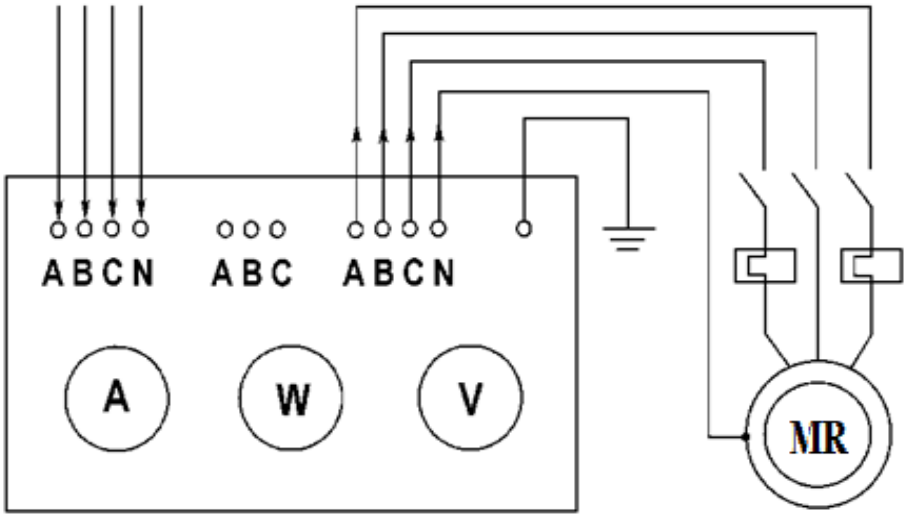

Figure 1. Measurement scheme for the power requirement of the electric device for sorting delinted cotton seeds

The power requirement of the device was analyzed under two distinct operating regimes: the idle (no-load) mode and the load mode.

During idle operation, the power drawn from the grid was 0.71 kW, whereas under load, this value reached 1.08 kW. The research results indicate that the electric motor must have a capacity of at least 1.08 kW to ensure continuous and stable operation. Therefore, to maintain a steady operating rhythm, a gear motor with a nominal power of 1.1 kW and a rotational speed of 40 rpm was selected. Furthermore, a control and high-voltage supply circuit for the potential electrode was developed.

Figure 2. Control and high-voltage power supply scheme of the experimental prototype of the electric device.

DOI: 10.65322/j.srd.02162026.35

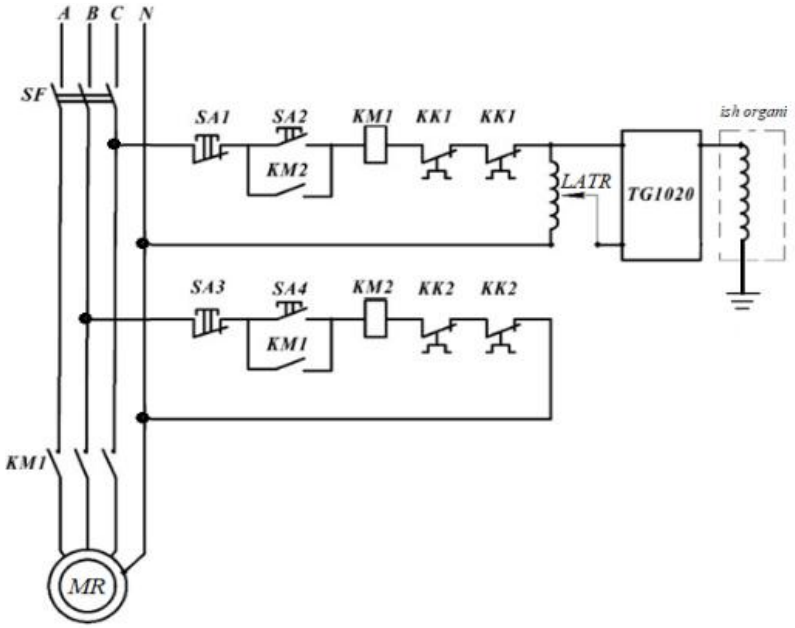

Figure 2. Control scheme of the experimental prototype

The startup procedure for the device is performed as follows: The device is connected to the electrical grid via the SF circuit breaker within the control circuit. Subsequently, by pressing the SA2 button, a 220 voltage is supplied to the laboratory autotransformer (LATR) through the KM1 magnetic starter. By adjusting the output voltage of the LATR, the required voltage is supplied to the potential electrode via the TG-1020 high-voltage transformer, in accordance with the physical and mechanical properties of the seeds being sorted.

Following this, the SA4 button is pressed to connect the gear motor to the grid using the KM2 magnetic starter. Once the technological sorting process is complete, the SA3 button is pressed to disconnect the electric motor first, followed by the SA1 button to disconnect the LATR from the grid.

The SF circuit breaker protects the electric motor against short circuits. Additionally, the control circuit incorporates a KK2 thermal relay; this component disconnects the motor from the grid during overloads, thereby providing protection against potential damage.

In this manner, the power consumption of the device was determined, an optimal gear motor was selected, and a control scheme was successfully developed to ensure the effective operation of the experimental prototype.

Discussion. The findings of this study further substantiate the critical significance of relay protection and automation (RPA) systems in the process of electric field-based fuzzy cotton seed sorting. The operational efficacy of the electric separator is contingent not only upon technological parameters but also directly correlates with the reliability and stability of its power supply system.

The power values identified through experimental trials (0.71 kW under no-load conditions and 1.08 kW under load) serve as fundamental criteria for the selection of the electric drive. The optimization of electric motor power is an extensively studied subject in the theory of electromechanical systems, requiring a precise alignment between load and nominal power to maximize the efficiency of the device. According to scholarly sources, motor overloading leads to excessive thermal stress and accelerated insulation degradation, thereby reducing the operational lifespan of the equipment.

The relay protection components integrated into the device (SF automatic circuit breaker and KK2 thermal relay) are fully consistent with classical protection standards employed in electrical installations. In low-voltage electrical systems, the use of automatic circuit breakers and

DOI: 10.65322/j.srd.02162026.35

thermal relays is mandatory for protection against short-circuits and overloads. This confirms that the developed circuit design is technically sound and practically viable.

From the perspective of energy efficiency, the selection of an optimally rated geared motor has effectively prevented redundant energy consumption. Energy conservation remains a primary objective in modern industrial systems; according to reports by the International Energy Agency (IEA), electric motors account for 60–70% of industrial electricity consumption. Consequently, optimizing motor power directly enhances economic performance.

This study provides a comprehensive analysis of relay protection and automation systems for electric separators, yielding empirically grounded results. The research outcomes are applicable not only to the cotton seed sorting industry but also to other electrotechnological processes involving the treatment of agricultural products

Conclusion

The relay protection and automation (RPA) systems of the electric separator designed for fuzzy cotton seed sorting were comprehensively studied, yielding the following scientific and practical results:

1. Energy consumption of the device was empirically determined, demonstrating a power requirement of 0.71 kW under no-load conditions and 1.08 kW under load. Based on these findings, a geared motor with a nominal power of 1.1 kW was identified as the optimal selection for the system.
2. The optimal selection of electric motor power resulted in:
   – Prevention of redundant energy expenditure;
   – Reduction of thermal stress (overheating) in the motor;
   – Enhancement of the efficiency (EFF) and operational reliability of the equipment.
3. Experimental trials confirmed that the developed electrical control circuit (comprising an SF automatic circuit breaker, KM magnetic starters, and a KK2 thermal relay) provides robust protection against:
   – Short circuits;
   – Prolonged overloads;
   – Voltage fluctuations.
4. The implementation of voltage regulation on the potential electrode via a high-voltage transformer and a laboratory autotransformer (LATR) enabled:
   – Adaptation of the sorting process to the physico-mechanical properties of the seeds;
   – Significant improvement in sorting precision and accuracy.
5. It was experimentally substantiated that the application of relay protection and automation systems enhances the overall operational efficiency of the device, reduces specific energy consumption, and minimizes the frequency of technical failures.

References

1. Rosaboev A.T. *Scientific and technological bases of sorting seeds in a triboelectric device: Monograph*. Tashkent, 2015.
2. Rosaboev A.T. "Research on the movement of raw cotton particles on the surface of a charged dielectric drum." *Mechanization and Electrification of Agriculture*. Moscow, 2016.
3. Rosaboev A.T. "Research on the distribution of induced voltage on the surface of a dielectric drum." *Bulletin of TSTU*. Tashkent, 2009.
4. Rosaboev A.T. "Methodology for researching fiber deformation and elasticity in an electric field." *Bulletin of TSTU*. Tashkent, 2015.
5. Aydarov S.G., Yuldoshev O.K., Usmanov I.I. "Scientific basis of selection of seeding seeds from the starting material." *IOP Conference Series: Earth and Environmental Science*, 2021.
6. Isroilovich U.I. "Method and Result of Identifying Separation Angle of Melon Seed

DOI: 10.65322/j.srd.02162026.35

from the Surface of Electric Selector's Operative Organ." *Harvard Educational and Scientific Review*, 2022.

7. Ministry of Energy of the Republic of Uzbekistan. *Rules for the operation of electrical installations*. Tashkent, 2021.

8. Qodirov S., Ismoilov N. *Relay protection in electric power systems*. Tashkent: Fan, 2022.

9. Popov V.S., Nikolaev S.A. *General electrical engineering with the basics of electronics*. Moscow: Energiya, 1972.